Twinfix Limited
201 Cavendish Place
Birchwood Park, Birchwood
Warrington, Cheshire
WA3 6WU

Tel: 01925 811311
Fax: 01925 852955
Email: enquiries@twinfix.co.uk
www.twinfix.co.uk

In-Line Access Hatch

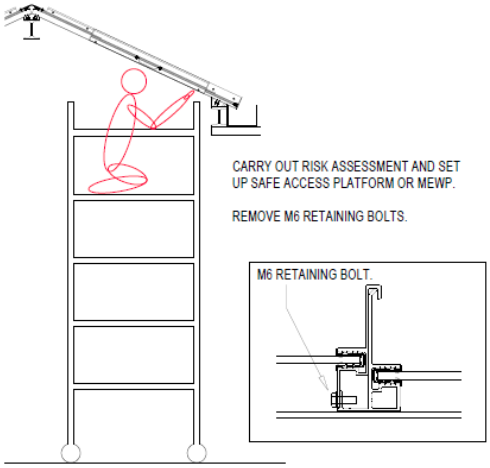

STEP 1

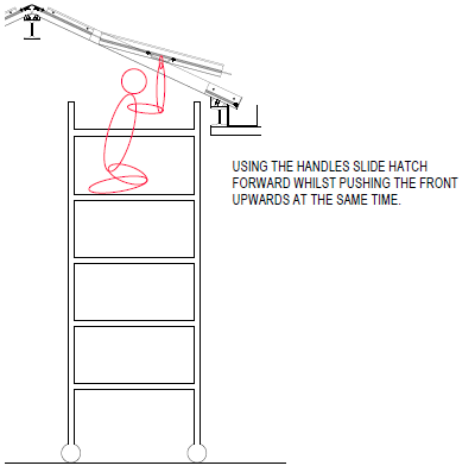

STEP 2

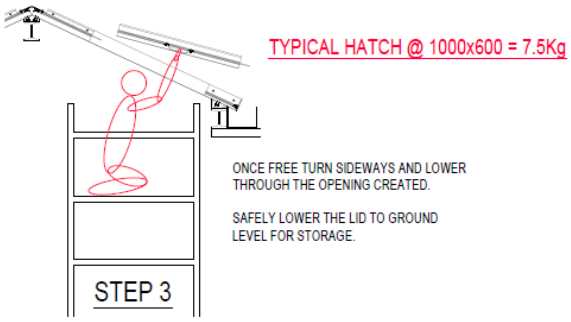

STEP 3

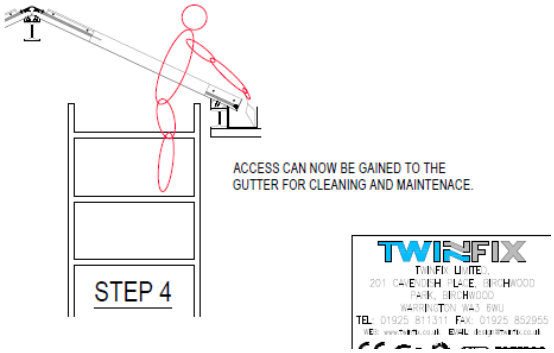

STEP 4